Radar Detection System

Team ID-9376

M. Deekshitha
M. Bhavana
K. Raja Sruthi
A. Sindhu
K. Vishunu Kowsik

Under the mentorship of,
Murty

Project Objectives

- Problem Statement
- Project Overview – Introduction
- End Users
- Wow Factor in Project
- Modelling/Block Diagram/Flow of Project
- Result/outcomes
- Conclusion
- Future Perspective

Problem Statement

The increasing need for affordable and efficient object detection systems in security, automation, and navigation necessitates a compact, cost-effective radar detection system. Existing systems are either expensive or complex. This project aims to develop a radar detection system using Arduino to provide real-time object detection and tracking capabilities with minimal cost and complexity.

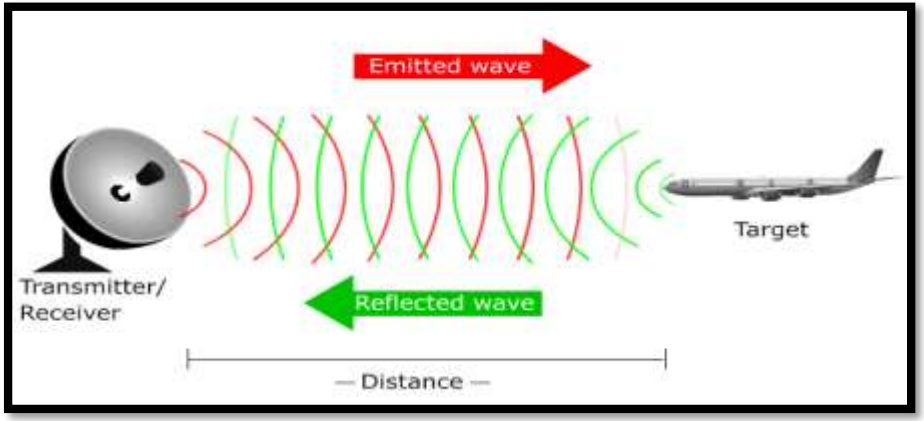

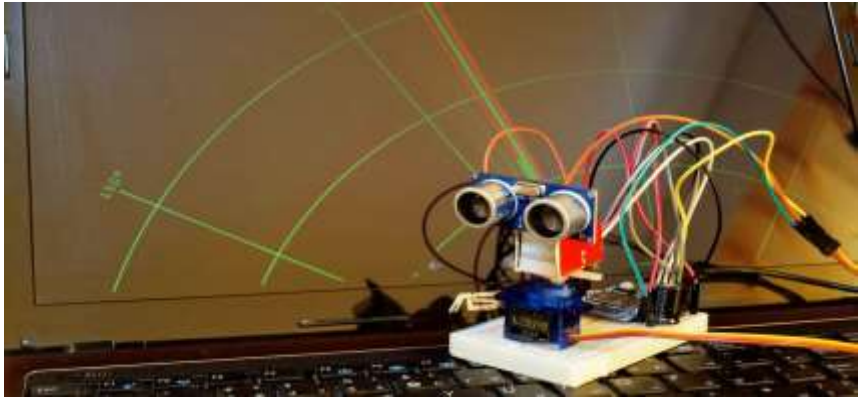

Project overview - Introduction

This project focuses on designing a radar detection system using an ultrasonic sensor, servo motor, and Arduino. The system will scan the surroundings, detect objects within a defined range, and display the results on a computer interface using Processing software. The main objective is to create a low-cost, efficient, and simple radar system for educational and practical applications.

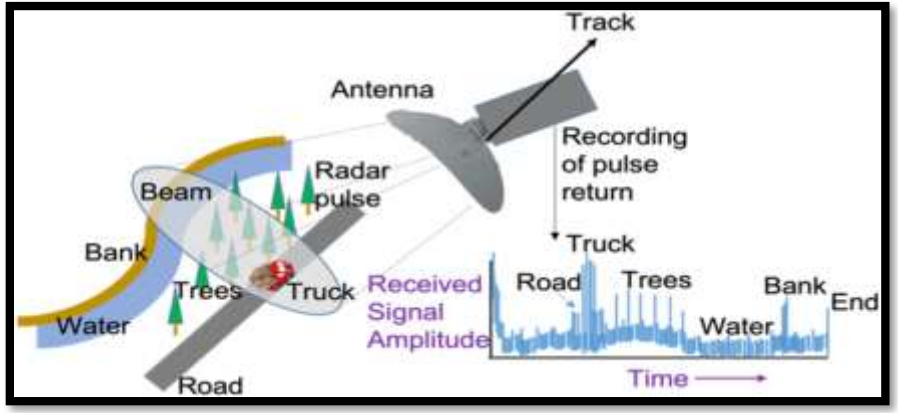

End User

- Robotics enthusiasts and hobbyists
- Students and researchers in electronics and automation
- Security personnel for surveillance applications
- Developers looking for cost-effective radar solutions
- Industries requiring proximity detection systems

Wow Factor in Solution

- Real-time object detection and visualization
- 180-degree scanning with an ultrasonic sensor
- Graphical user interface (GUI) for live monitoring
- Cost-effective alternative to traditional radar systems
- Can be further integrated with IoT and AI for enhanced functionality.

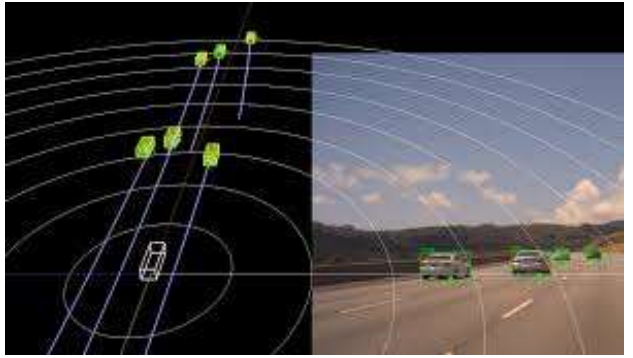

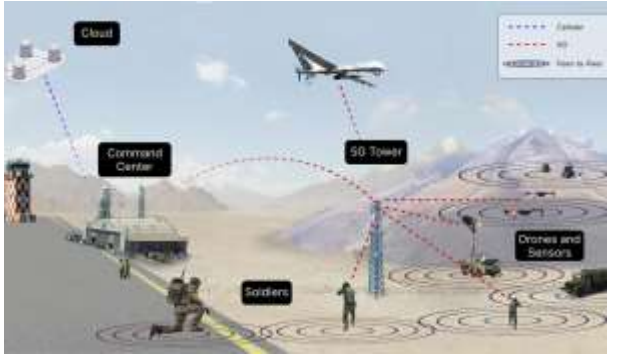

Modelling

1. **Power Supply** → Powers the Arduino and components.
2. **Arduino Board** → Controls the ultrasonic sensor and servo motor.
3. **Ultrasonic Sensor (HC-SR04)** → Measures distance of objects.
4. **Servo Motor** → Rotates the sensor for scanning.
5. **Processing Software** → Visualizes detected objects on a computer

Circuit Diagram

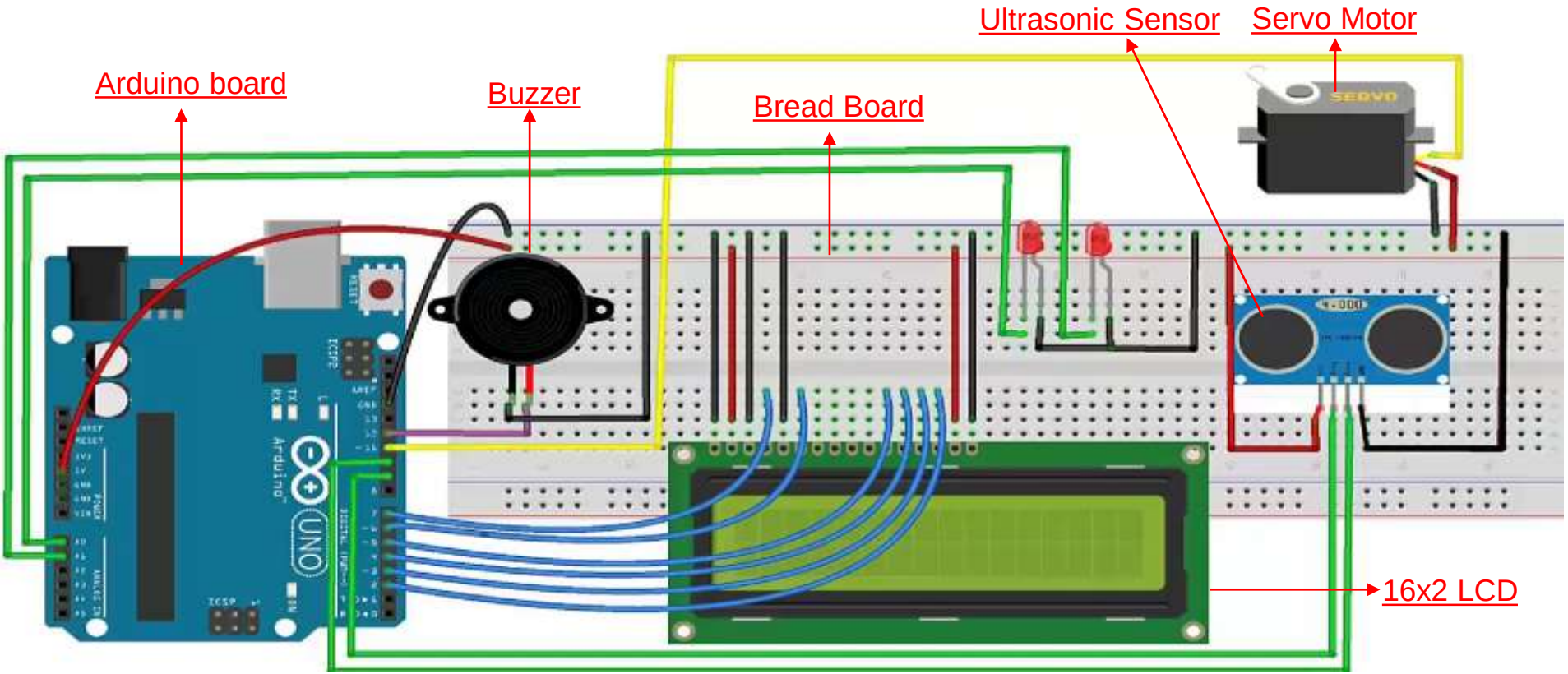

Result / Outcomes

Prototype Level Solution

At the prototype level, the radar detection system is constructed on a breadboard using an Arduino Uno, ultrasonic sensor, servo motor, buzzer, LEDs, and an LCD display. The components are wired together to allow real-time object detection and distance measurement. The system is tested in a controlled environment to ensure functionality before moving towards a more robust implementation.

- The system successfully detects objects within a predefined range.
- Real-time data visualization on a computer screen.
- Cost-effective and easy-to-build radar system.
- High accuracy in short-range detection.
- Audible and visual alerts through buzzer and LEDs.
- Potential applications in security and automation.

Conclusion

The Arduino-based radar detection system provides an efficient, affordable, and functional solution for real-time object detection. Its ease of implementation and adaptability make it suitable for various applications. The project demonstrates the capability of using simple electronic components to create a working radar system, making it an excellent learning tool for students and developers.

Future Perspective

- Enhancing accuracy by integrating multiple sensors.
- Implementing machine learning for object classification.
- Extending the range using advanced sensors like LIDAR.
- Integrating wireless communication for remote monitoring.
- Developing an autonomous navigation system using radar feedback.

Thank you...!